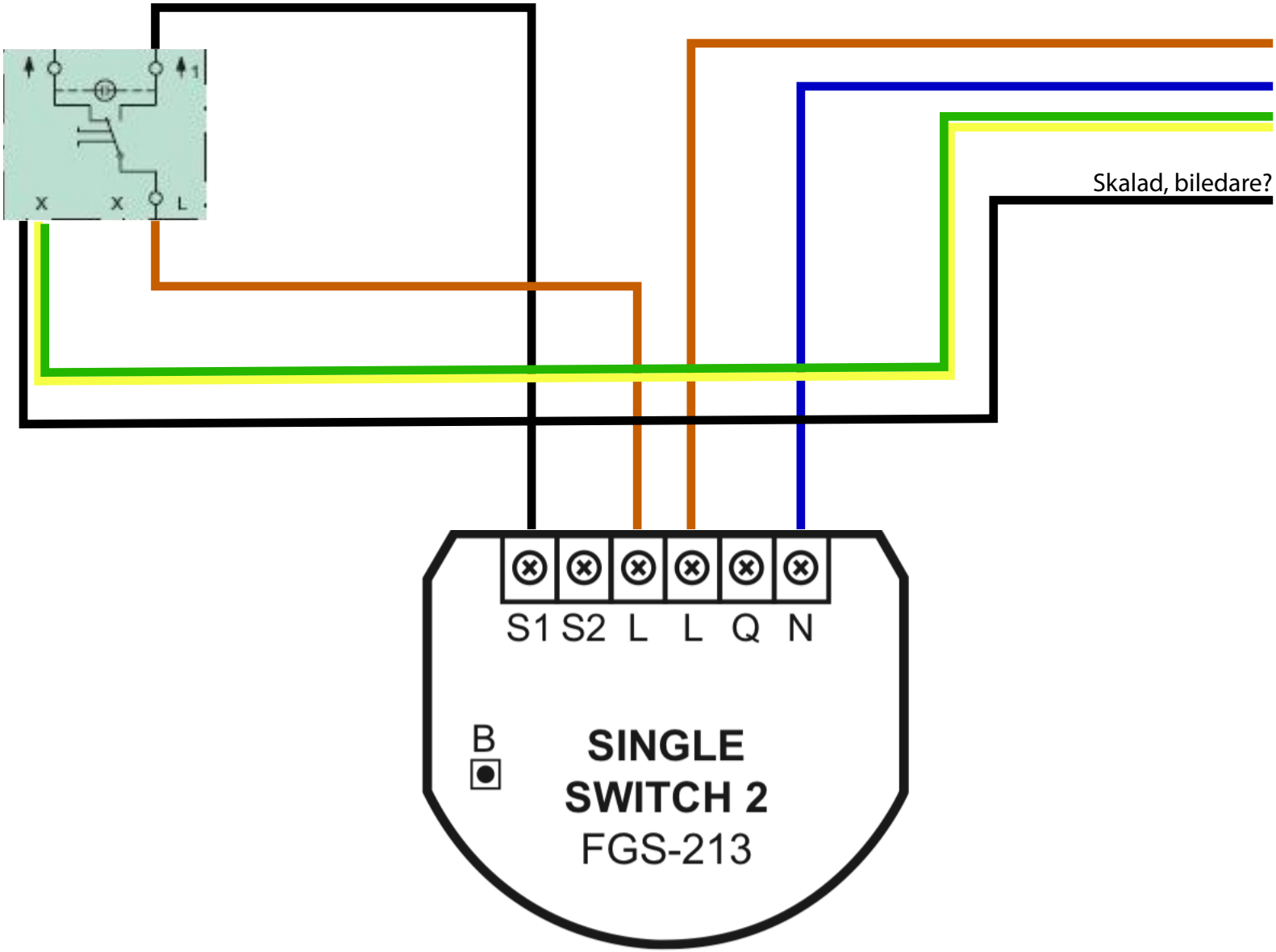
X
X
L
Skalad, biledare?
S1 S2 L L Q N
B
SINGLE
SWITCH 2
FGS-213