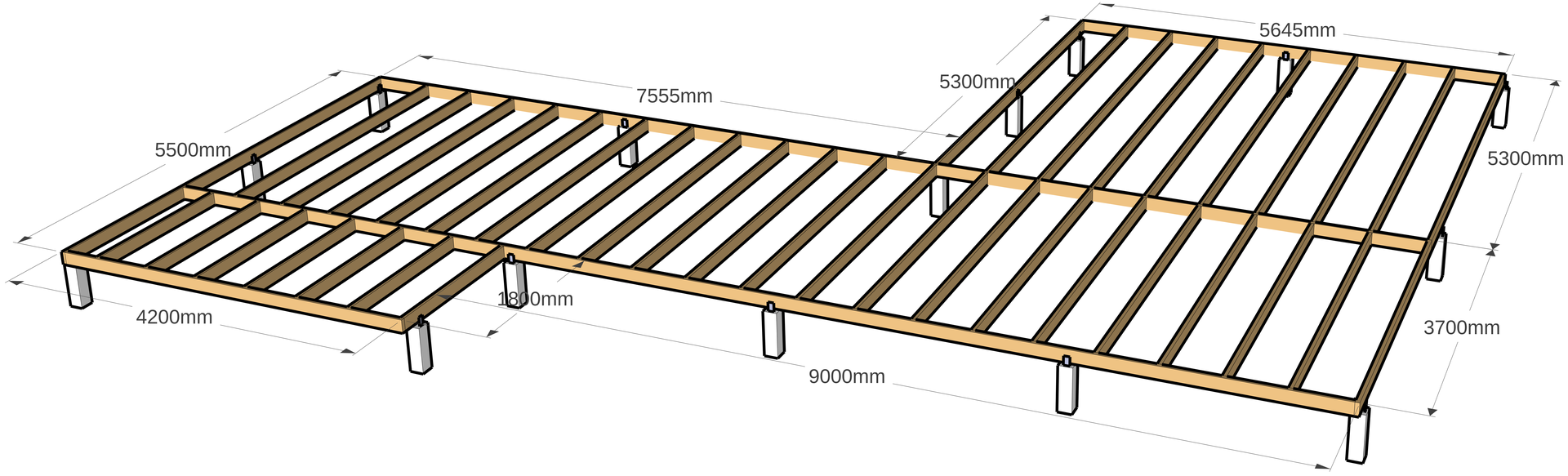
5645mm
5300mm
7555mm
5500mm
5300mm
1800mm
4200mm
3700mm
9000mm